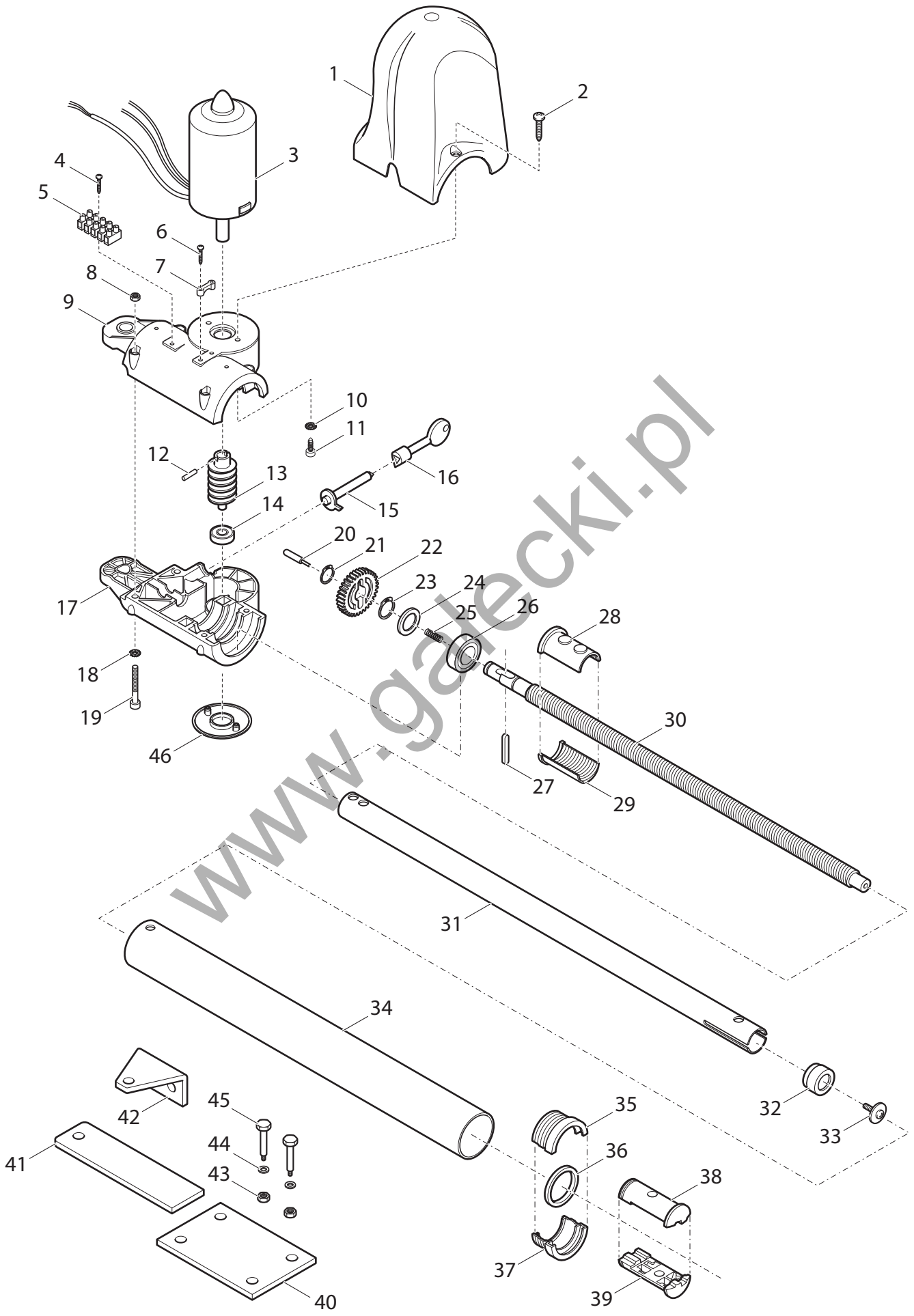

www.gadecki.pl